SANTA-FE™ DEHUMIDIFIERS

INSTALLATION & OPERATION INSTRUCTIONS

The **Santa-Fe Advance Dry110** is designed for superior dehumidification in basements, crawl spaces, and attics. It features industry exclusive dual exhaust outlets for maximum space drying and installation flexibility. Other features included an onboard digital control with a terminal block, dew point cut out, and a low maintenance built in P-trap.

Serial Number _____

Install Date _____

Sold By _____

SANTA-FE™ 6-YEAR | TOTAL PEACE OF MIND WARRANTY
5-YEAR FULL REPLACEMENT + 1-YEAR PARTS

INTERTEK ETL LISTED

ENGINEERED MADISON, WI

Patent: rpc-pat.com

Table of Contents

Safety Instructions 3

Intended Applications 4
- Registrations and Certifications 4
- Items Included in Box: 4

Dehumidifier Set Up 5
- Location Considerations 5
- Unventilated Areas 5
- Installing Leveling Feet 5

Electrical Requirements 6

Hardwiring 7

Drain Installation 10
- Traditional P-Trap Option 10
- Built-In Ball Trap Option 11

Controls 13
- Set the Relative Humidity Setpoint 13
- Set the Fan Mode 13
- Air Sampling 13
- Dew Point Cut Out 14
- Temperature Cut Out 14
- External Control Mode 14
- Terminal Block Layout 14
- Float Switch Cut Out 14
- Remote Sensor 14
- Fan Control 14
- DEHU Control 14
- Error Codes 15
- Function Check 15
- External Controller Option 15
- On Board Power 15

Air Filtration 16

Ducting to Finished Areas (Optional) 17
- Attaching Duct Collars 17
- Recommended Installations 17

Service 18
- Warranty 18
- Technical Description 18
- Service Personnel 18
- Checks to Electrical Devices 19
- Sealed Electrical Components Shall Be Replaced 19
- Intrinsically Safe Components Must Be Replaced 19
- Detection of Flammable Refrigerants 20
- Refrigerant Removal and Evacuation 20
- Charging Procedures 20
- Decommissioning 21
- Labelling Decommission Machines 21
- Refrigerant Recovery 21
- Troubleshooting 22
- Refrigerant Charging 23

Warranty 24

AprilAire® / Santa-Fe
1015 East Washington Avenue | Madison, Wisconsin 53703
1-800-334-6011
www.Santa-Fe-Products.com

© 2026 Santa-Fe Dehumidifiers

Safety Instructions

⚠ WARNING!

THIS SYMBOL MEANS IMPORTANT INSTRUCTIONS. FAILURE TO HEED THEM CAN RESULT IN SERIOUS INJURY OR DEATH.

⚠ CAUTION!

THIS SYMBOL MEANS IMPORTANT INSTRUCTIONS. FAILURE TO HEED THEM CAN RESULT IN INJURY OR MATERIAL PROPERTY DAMAGE.

Read the installation, operation and maintenance instructions carefully before installing and operating this device. Proper adherence to these instructions is essential to obtain maximum benefit from the Santa-Fe Whole House Ventilating Dehumidifier.

⚠ WARNING!

120 VOLTS MAY CAUSE SERIOUS INJURY FROM ELECTRIC SHOCK. DISCONNECT ELECTRICAL POWER BEFORE STARTING INSTALLATION OR SERVICING, AND LEAVE POWER DISCONNECTED UNTIL INSTALLATION OR SERVICE IS COMPLETED.

⚠ CAUTION!

- Always use caution and wear CUT RESISTANT gloves when handling sheet metal.
- Improper installation may cause property damage or injury. Installation, service, and maintenance must be performed by a qualified service technician.
- The dehumidifier is heavy. Handle with care and follow installation instructions.
- Never operate a unit with a damaged power cord. If the power cord is damaged, it must be replaced by the manufacturer, its service agent, or a similarly qualified person in order to avoid a hazard.
- This appliance is not intended for use by persons (including children) with reduced physical, sensory or mental capabilities, or lack of experience or knowledge, unless they have been given supervision or instruction concerning the use of the appliance by a person responsible for their safety. Children should be supervised to ensure that they do not play with the appliance.
- The device is designed to be installed indoors in a space that is protected from rain and flooding.
- Install the unit with enough space to access all sides for maintenance and service. The entire shell needs to be removed in order to do repairs.
- Avoid directing the discharge air at people. The dehumidifier should be used in the upright position.
- Keep any required ventilation openings clear of obstruction.
- Ducts connected to the dehumidifier shall not contain a POTENTIAL IGNITION SOURCE.
- Supply and return air shall be directly ducted to the space. Open areas such as false ceilings shall not be used as a return air duct.
- This unit is designed to be fixed in place and should not be seasonally relocated.
- DO NOT use the dehumidifier as a bench or table.
- Do not place the dehumidifier directly on structural building members without vibration absorbers or unwanted noise may result. Place the Santa-Fe dehumidifier on supports to raise the base of the unit.
- A drain pan with a float switch must be placed under the dehumidifier if installed above a living area or above an area where water leakage could cause damage.
- Make all electrical connections in accordance with the current edition of the NEC ANSI/NFPA 70 and any national and local codes or ordinances that may apply.
- Maintain a minimum 1ft. (.3m) clearance to avoid obstructing the air return and supply.
- Not intended for use at altitudes over 6500 ft (2000M).
- The minimum floor area of the storage room shall be 28 m2 (square meters).

REFRIGERANT SAFETY GROUP A2L

⚠ WARNING!

DO NOT USE MEANS TO ACCELERATE THE DEFROSTING PROCESS OR TO CLEAN, OTHER THAN THOSE RECOMMENDED BY THE MANUFACTURER. THE APPLIANCE SHALL BE STORED IN A ROOM WITHOUT CONTINUOUSLY OPERATING IGNITION SOURCES (FOR EXAMPLE: OPEN FLAMES, AN OPERATING GAS APPLIANCE, OR AN OPERATING ELECTRIC HEATER. DO NOT PIERCE OR BURN. BE AWARE THAT REFRIGERANTS MAY NOT CONTAIN AN ODOR.

Intended Applications

The Santa-Fe Advance Dry110 is registered with the DOE as a portable dehumidifier with a capacity above 50 pints per day. It is a stand-alone dehumidifier intended to operate within the dehumidified space, such as basements and crawl spaces: however, the unit can be placed in almost any residential setting where dehumidification is desired.

The Santa-Fe Advance Dry110 is designed to operate in temperatures between 40° and 95°F. This unit works most effectively between 56° and 95°.

In order to efficiently control humidity levels, the area in which the dehumidifier is to be operated must be free of water intrusion or excessive fresh (outside) air infiltration. Before installing the Santa-Fe Advance Dry110, water intrusion and air infiltration problems should be addressed.

Registrations and Certifications

The Santa-Fe Advance Dry110 conforms to unified standard UL 60335-2-40 and CSA standard C22.2.60335-2-40.

The Santa-Fe Advance Dry110 is certified as a “Portable Dehumidifier” per 10CFR430 - Energy Conservation Program for Consumer Products

Brand Name	Individual Model Number	Basic Model Number	Rating Conditions	Integrated Energy Factor (L/kWh)	Capacity (Pint/Day)
Santa-Fe Advance Dry110	4047010	110.1-P	65F/60%	2.82	70

Items Included in Box:

- Santa-Fe Advance Dry110 Dehumidifier
- Santa-Fe Advance Dry110 Installation & Operation Instructions
- Santa-Fe Advance Dry110 Leveling Feet
- 8' Drain Hose
- Drain Adapter
- Merv-13 Filter
- Hardwire kit
- Red Drain Trap Ball
- L shaped T20 Torx Bit (for drain access)

Scan to Register Product

Dehumidifier Set Up

Location Considerations

The dehumidifier can be installed in a variety of locations to meet the owner's needs as listed below. In all cases, keep the following cautions in mind:

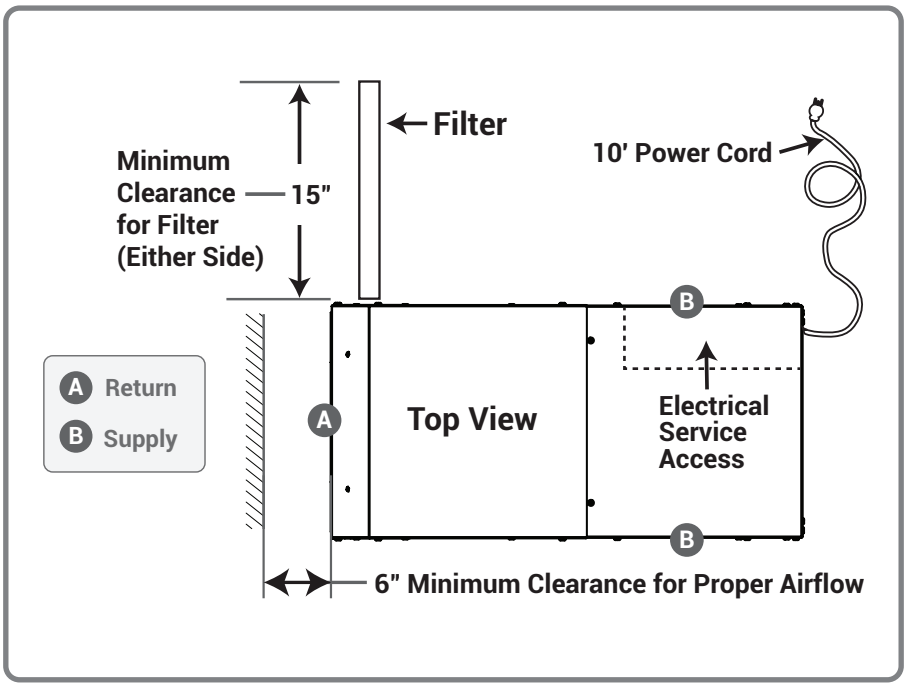

- Locate the dehumidifier near a suitable drain (8' drain hose included). Allow for proper drainage and routing of needed drain pipes.
- Locate the dehumidifier in an area where the cord's length (10') easily reaches a 115 VAC electrical outlet with a minimum of a 15 Amp circuit capacity.
- The unit is designed to operate while level. If the unit is placed on an unlevel surface, refer to section below (Installing Leveling Feet). Failure to level the unit may result in leakage or improper drainage.
- The dehumidifier may be suspended with steel hanger, straps, or a suitable alternative from structural members, unit must be supported from underneath. Don't hang from sides or ends.
- The unit should be suspended with a hang kit from the floor joists if there is any possibility of flooding. A flooded unit is not covered by warranty. Feet will be installed as a securing measure after the hang kit is put on the dehumidifier. DO NOT hang the dehumidifier from its' cabinet.
- The minimum floor area of the room shall be 6.6 square meters.
- Allow sufficient clearance to handle the unit's overall dimensions as well as any optional return and supply ductwork to the unit.
- Allow sufficient clearance for filter removal and to prevent airflow obstruction.
- Keep any required ventilation openings clear of obstruction.
- Ducts connected to the dehumidifier shall not contain a POTENTIAL IGNITION SOURCE.
- Supply and return air shall be directly ducted to the space. Open areas such as false ceilings shall not be used as a return air duct.
- Electrical service access will require the removal of the outside shell. Allow sufficient clearance around the unit.

Unventilated Areas:

- Unventilated areas where the dehumidifier is installed or stored need to be so constructed that should any refrigerant leak, it will not stagnate so as to create a fire or explosion hazard.
- The dehumidifier shall not be stored or ducted into one or multiple rooms with continuously operating open flames (for example an operating gas appliance) or other POTENTIAL IGNITION SOURCES (for example an operating electric heater, hot surfaces). A flame-producing device may be installed in the same space if the device is provided with an effective flame arrest.

Installing Leveling Feet

- Lay down a protective pad (pillow, blanket, etc.).
- Carefully turn unit onto side.
- Install leveling feet and adjust to the desired position to ensure unit is level for proper drainage.
- Carefully bring unit to upright position.
- Wait a minimum of 10 minutes before operating.

Electrical Requirements

The Santa-Fe Advance Dry110 dehumidifier plugs into a common grounded 115VAC outlet. The Advance Dry110 draws 4.1 Amps at 65°F and 60% RH. Locate the dehumidifier in an area where the cord's length (10') easily reaches a 115 VAC electrical outlet with a minimum of 15 Amp circuit capacity. If used in an area that may become wet, a GFCI protected circuit is recommended. The unit should not be used in areas prone to flooding. Consult local electrical codes for any further information.

⚠ CAUTION!

ELECTRICAL SHOCK HAZARD. ELECTRICAL POWER MUST BE PRESENT TO PERFORM SOME TESTS. THESE TESTS SHOULD BE PERFORMED BY A QUALIFIED SERVICE PERSON.

Wiring Schematic

Critical Error #	POWER	40	45	50	55	60	EXT	RS	ON	AUTO	Description
3	●	★	○	○	○	○	○	○	★	★	Out of refrigerant
4	●	★	★	○	○	○	○	○	★	★	Float switch tripped
8	●	★	★	★	★	★	★	○	★	★	Comm Error
9	●	★	★	★	★	★	★	★	★	★	High pressure cut-out

● = On, not blinking ★ = Blinking ○ = Off

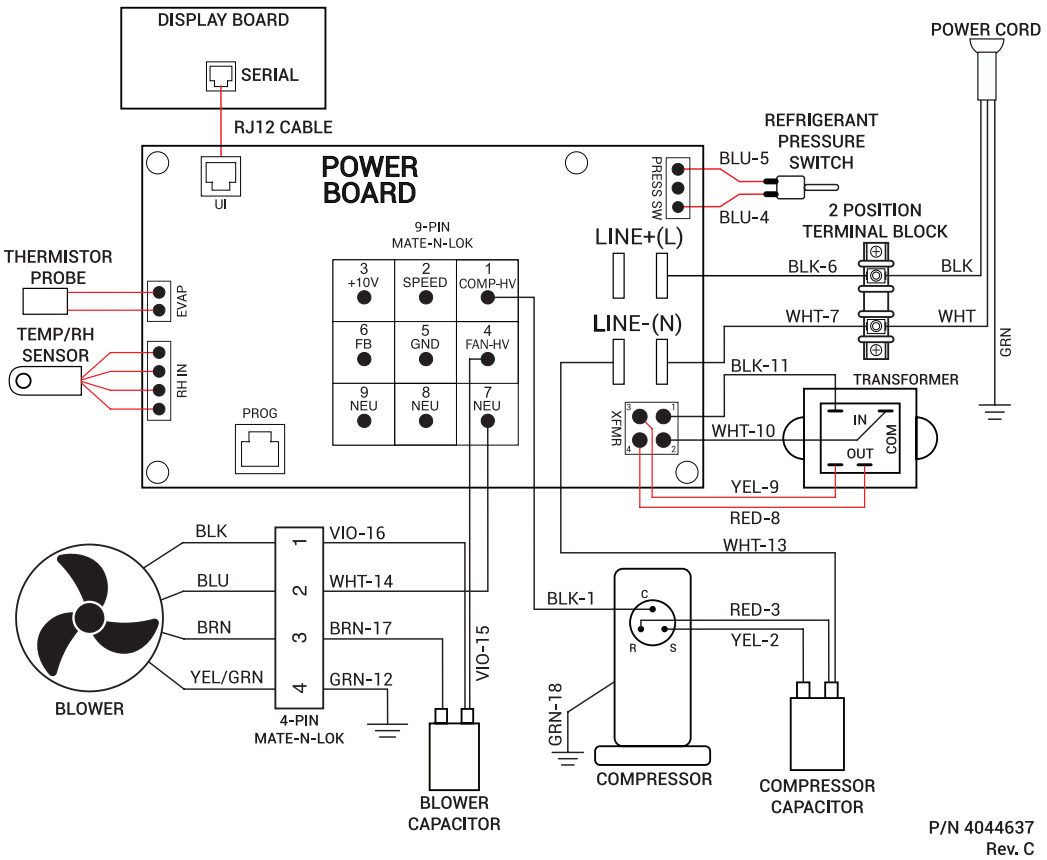

Hardwiring

⚠ WARNING!

SERVICING THE ADVANCE DRY110 DEHUMIDIFIER, WITH ITS HIGH PRESSURE REFRIGERANT SYSTEM AND HIGH VOLTAGE CIRCUITRY PRESENTS A HEALTH HAZARD WHICH COULD RESULT IN DEATH, SERIOUS BODILY INJURY, AND/OR PROPERTY DAMAGE. ONLY QUALIFIED SERVICE PEOPLE SHOULD SERVICE THIS UNIT.

Tools Required

- T25 Torx Driver
- 11/32" Driver

Following all local and national electrical codes and standards, route electrical service to the location that the dehumidifier will be installed. A field-installed disconnect is required when hardwiring this dehumidifier.

Step 1. Remove metal cabinet.

a. Remove 12 Screws

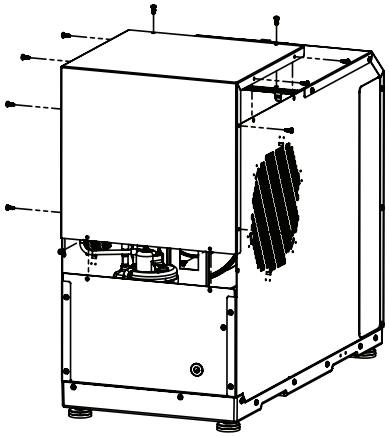

b. Remove 13 Screws

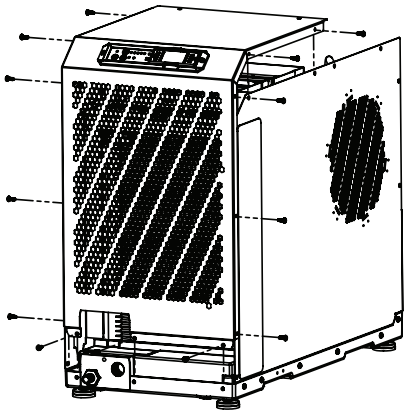

c. Remove 8 Screws

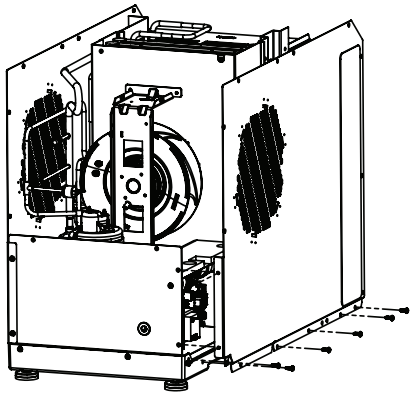

Step 2. Remove hardwire cover.

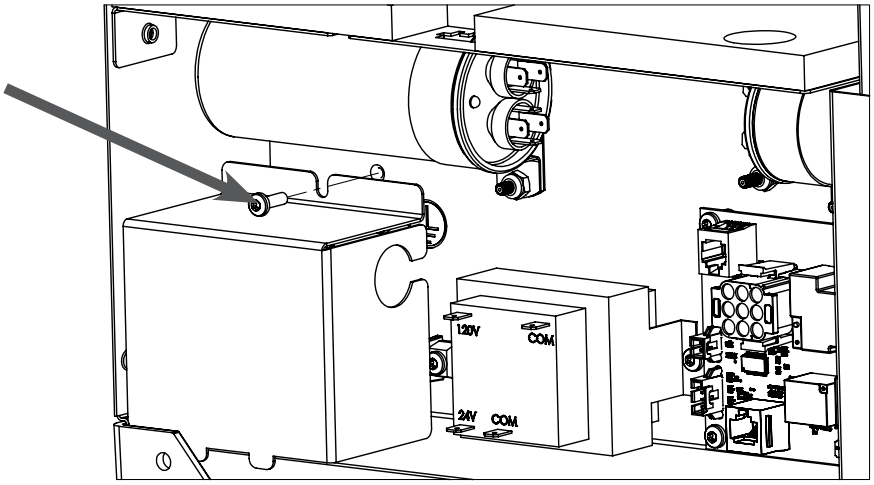

Hardwiring

Step 3. Remove electrical cord. Remove BLACK and WHITE wires from terminal leading to the power cord (A and B). Leave the internal wire harness wires on the bottom of the terminal. Remove green ground wire from ground stud (C).

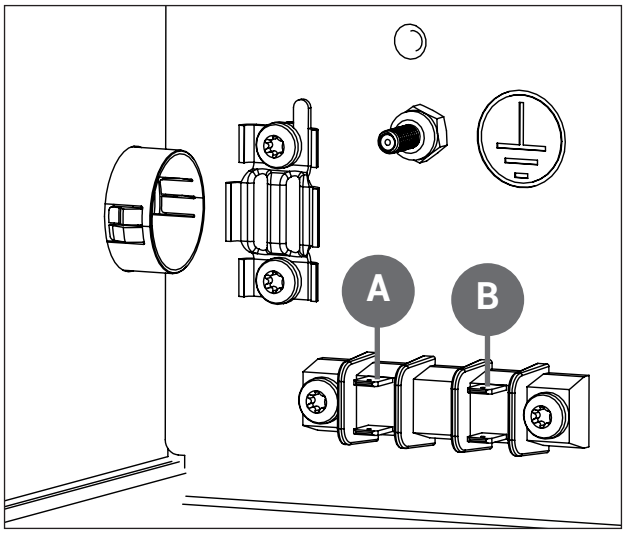

Step 4. Remove power cord retention bracket (D and E) and black cord bushing (F).

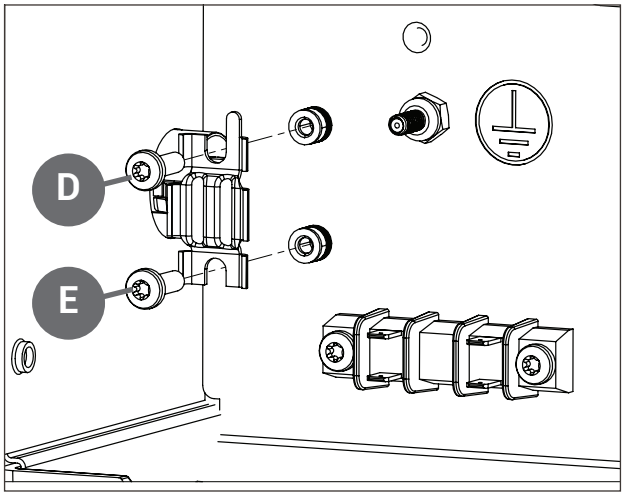

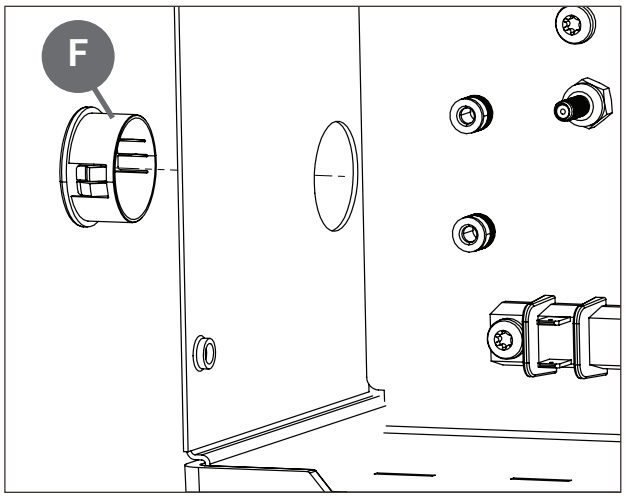

Step 5. Route wires through 7/8" hole and secure using the clamps intended for conduit or cable. There is a hardwire jumper kit included with the unit.

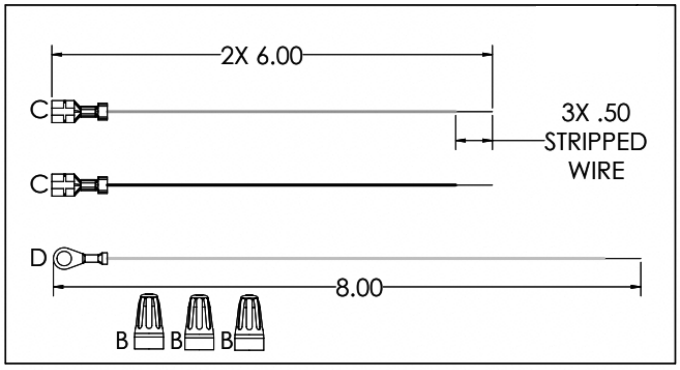

Hardwiring

Step 6. Connect BLACK and WHITE jumper wires to terminal block (A and B). Ensure the BLACK jumper wire is installed across from the black internal wire harness wire. Ensure the WHITE jumper wire is installed across from the white internal wire harness wire.

Place GREEN jumper wire ring terminal on ground stud (C) and use 11/32" driver to secure nut to stud.

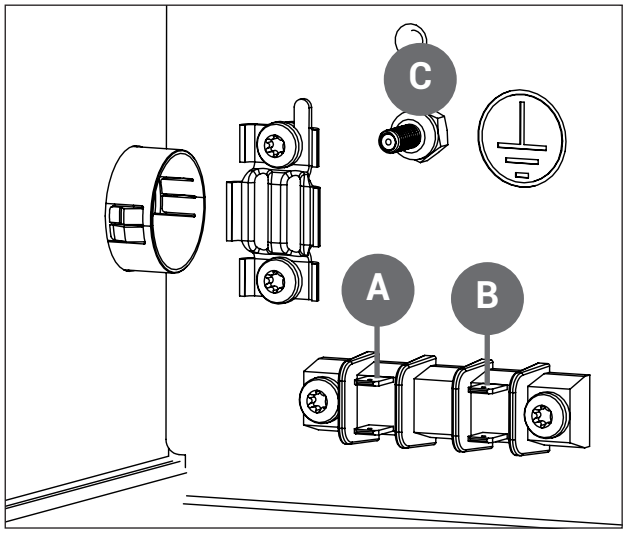

Step 7. Attach incoming hot service wire to BLACK jumper wire with the provided wirenut. Attach incoming common service wire to WHITE jumper wire with the provided wirenut. Attach incoming service GROUND wire to GREEN jumper wire with the provided wirenut.

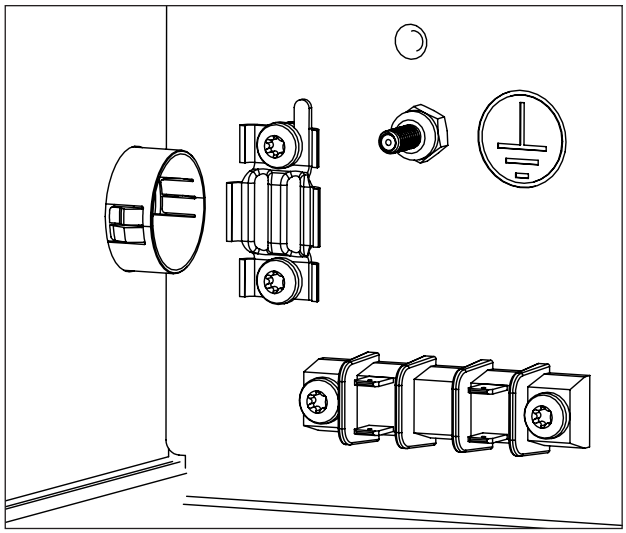

Step 8. Install hardwire cover and screw (reverse step 2).

Drain Installation

The Santa-Fe Advance Dry100 requires a drain P-trap to ensure proper condensate drainage. This unit generates condensate and comes equipped with a built-in P-trap, though a traditional external P-trap may also be used.

For installations where the dehumidifier is suspended above a finished area or in locations where water leakage could cause damage, place a secondary drain pan with a float switch beneath the unit. If using a traditional P-trap, the dehumidifier must be fastened to supports that elevate the base of the unit 6.75" above the secondary drain pan to allow sufficient space for P-trap installation.

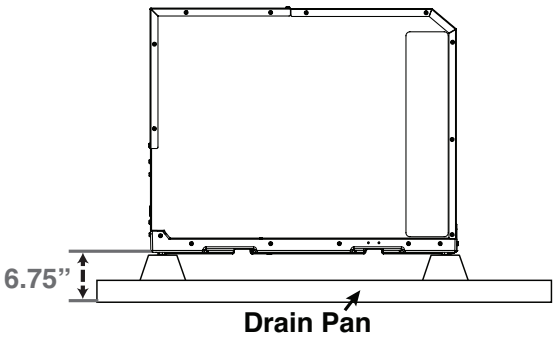

The unit features an industry exclusive dedicated float switch port (float switch is not provided and must be purchased separately) to shut the Advance Dry110 off in the event the main drain port clogs or fails. In order to use this feature, the internal plug needs to be knocked out. If the unit is located above or in the living space, according to code, a secondary drain pan is to be placed under the unit and a float switch should be wired to the dehumidifier.

Install a 3/4" male threaded NPT adapter to the drain pan. Use a drainpipe assembly made of 3/4" PVC pipe to transport condensate to a drain, ensuring a downward pitch of 1/4" per foot for proper flow. An optional condensate pump kit is available for the Santa-Fe Advance Dry100 if lifting is required to dispose of condensate. When the water level in the pump's reservoir rises, the float switch closes, automatically pumping condensate to a remote location. Santa-Fe also offers risers (sold separately) to elevate the unit to the required height. The pump includes a safety float switch with white leads extending from beneath the pump cover. These leads should be connected to the FLOAT terminals on the dehumidifier's terminal block by a qualified electrician.

Dehumidifiers often utilize a negative air pressure drain pan, which can cause air to flow backward through the drain system, leading to water pooling inside the unit and potential leaks. A P-trap prevents this by trapping water in the pipe, blocking reverse airflow.

⚠ CAUTION!

FOR PROPER DRAINAGE, THE UNIT MUST BE MOUNTED SO THE DRAIN OUTLET IS AT LEAST 6.75" ABOVE THE FLOOR DRAIN, AND MUST BE FULLY SUPPORTED UNDER THE BASE.

⚠ CAUTION!

A P-TRAP IS REQUIRED TO ENSURE PROPER CONDENSATE DRAINAGE. THIS UNIT COMES EQUIPT WITH A BUILT-IN P-TRAP. THE UNIT MUST USE EITHER THE BUILT-IN P-TRAP OR A TRADITIONAL P-TRAP. SEE INSTRUCTIONS ON PAGE 11 FOR THE BUILT-IN P-TRAP. SEE INSTRUCTIONS BELOW FOR THE TRADITIONAL P-TRAP.

Traditional P-Trap Option

Condensate drains by gravity through the drain port using a 3/4" male NPT PVC pipe. An optional condensate pump kit may be installed if lifting is needed. Ensure the PVC drainpipe is pitched downward at 1/4" per foot to facilitate proper drainage.

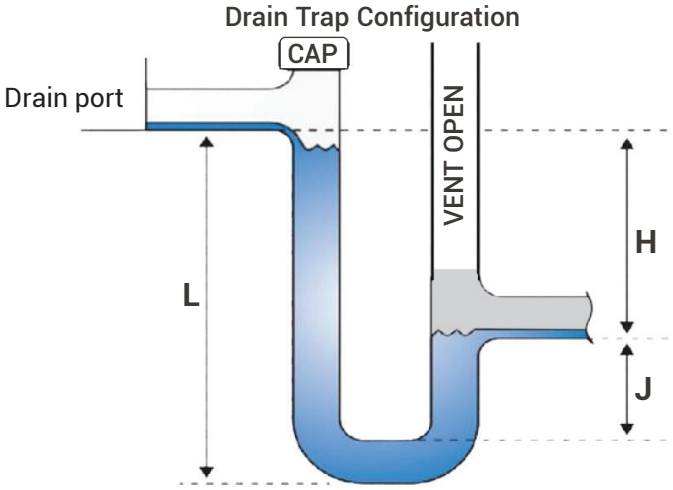

Follow Diagram:
H = 4"
J = 2"
L = 6.75"

Vent:
- Place vent after the trap.
- Vent should be open.
- Height of vent should be higher than drain outlet.

Cap:
- A clean out can be placed before trap but must be sealed with a cap.

Drain Line:
- Drain line should go in a downward slope to the drain.
- 1/4" drop per foot.

Drain Installation

Built-In Ball Trap Option

The Santa-Fe Advance Dry100 features a built-in P-trap with a patented air trap design. This allows liquid condensate to drain from the dehumidifier while preventing air from entering or escaping the unit, eliminating the need for an external P-trap.

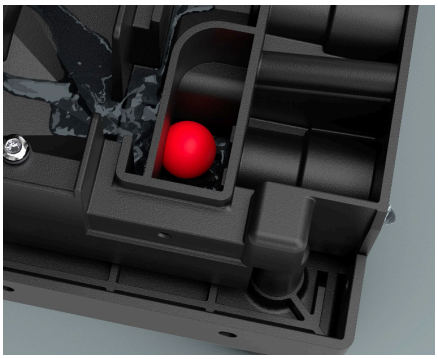

ICC-ES Evaluated
Air-Traps meet IMC® Code Section M307.2.4.1

The Air-Trap™ concept has been incorporated into IAPMO IGC 196-2018 Standard for Condensate Traps and Overflow Switches for Air-Conditioning Systems.

For more information, visit:
- https://www.iapmomembership.org
- https://www.deschampstechnologies.com/products/ewExternalFiles/PMG-1697%20Final%20Report.pdf

Installation Instructions

Parts Needed:
- 1x Ball
- 1x T20 torque bit

Note: the ball trap is only located on the front left side of the unit and should be accessible after installation.

Step 1. Remove magnet door and filter.

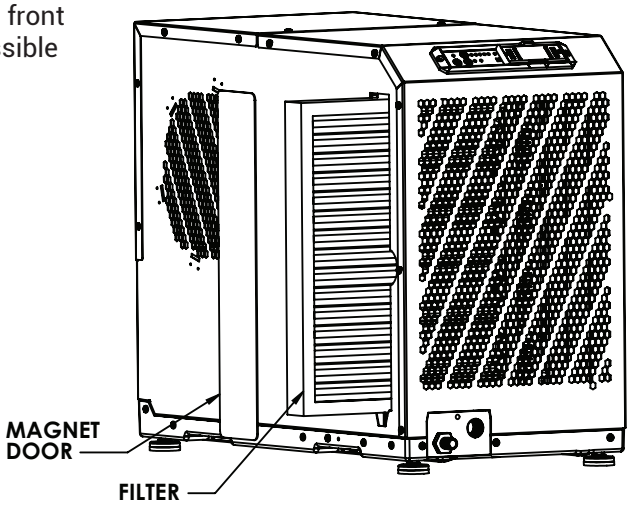

Step 2. Use torque bit to remove screw of ball trap cover.

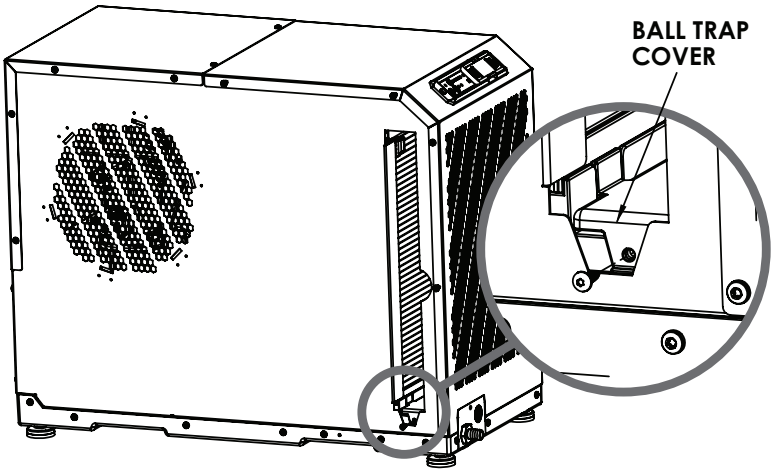

Drain Installation

Step 3. Place ball in drain pan.

NOTE: Ensure the ball is placed correctly.

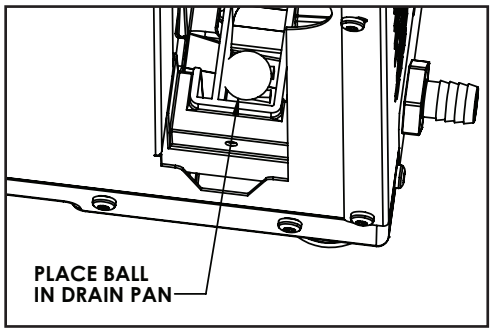

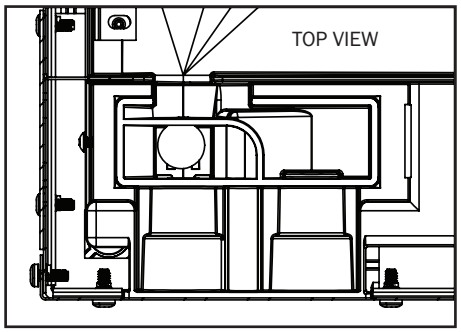

Step 4. Replace cover back and install torque screw.

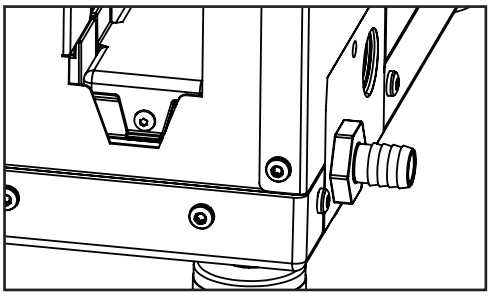

Step 5. Reinstall filter and magnetic door on unit.

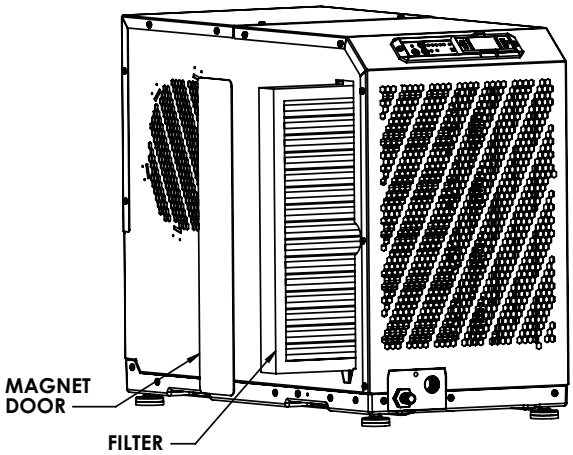

Step 6. Remove sticker near drain line and ensure the vent hole is unrestricted.

NOTE: If using traditional p-trap in drain line, do not remove sticker near drain line.

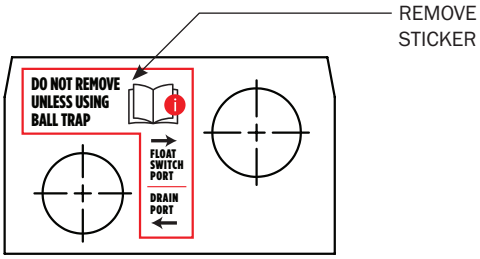

Step 7. Install drain line. No need for p trap or knot in drain line. Drain downward at >3 degree. Ensure PVC drain is pitched downward.

Controls

The Santa-Fe Advance Dry110 dehumidifier can be controlled by its onboard dehumidistat or with an external control using its low voltage terminal block.

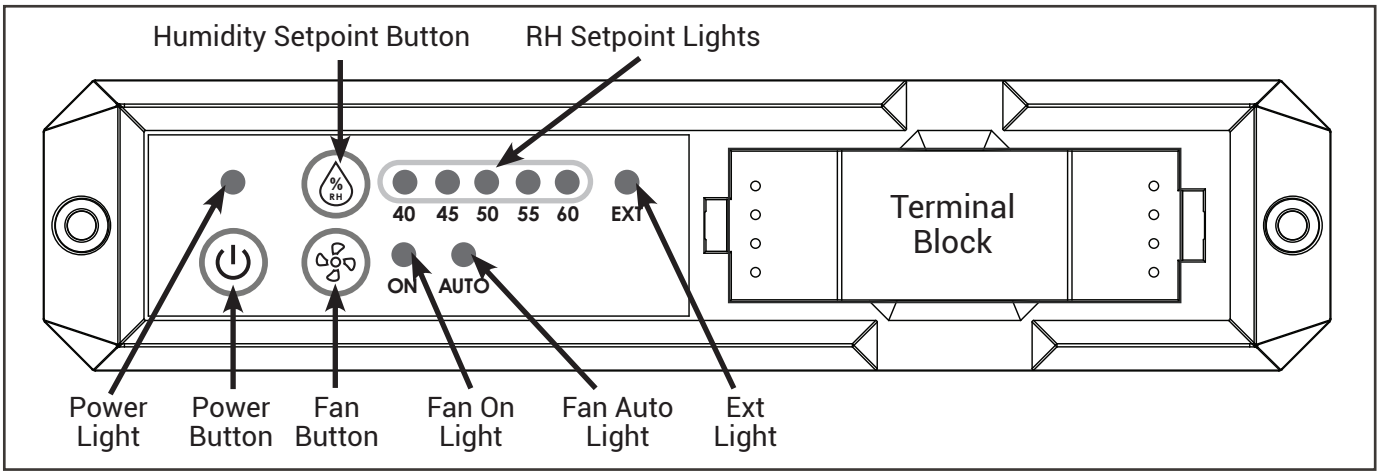

When the Unit is Off: Fan, Compressor, Display and all LEDs are off

To Turn Unit On: Press the Power Button

To Turn Unit Off: Press the Power Button

When the Unit is On: Light above Power Button is illuminated. Light above RH Setpoint is illuminated and fan mode light is illuminated. In the event of a power outage, the unit will resume operation with the same RH Setpoint and Fan Mode once power turns back on.

Set the Relative Humidity Setpoint

Press the RH Button.

Each press of the RH Setpoint Button will increase the relative humidity by 5%. The light above the RH setpoint will illuminate. After 60% the unit will switch to EXT mode – see section 5.2. To return back to 40% setpoint, push the RH Button again and the setpoint will cycle back and start at 40%. Continue to press the RH Setpoint Button until the desired Setpoint is illuminated.

Note: After the dehumidifier reaches the selected RH Setpoint, the unit will wait at least 15 minutes before turning back on. This is to avoid the unit turning on and off too quickly.

Set the Fan Mode

Pressing the Fan Button alternates the Fan Mode between On and Auto. When On is illuminated the fan will run continuously. When Auto is illuminated the fan will run when the compressor is on and the unit is dehumidifying.

Air Sampling

When operating in Internal Control Mode, the dehumidifier will turn on the fan in order to move air through the unit and measure the relative humidity of the air at the end of the sample.

If the relative humidity of the air at the onboard sensor is reading below the RH Setpoint, the dehumidifier will turn the fan on for 1 minute every 60 minutes. After running the fan for 1 minute and the relative humidity of the air is still below the RH Setpoint, the fan will turn off. The dehumidifier will sample the air again in 60 minutes.

If the relative humidity at the onboard sensor is reading above the RH Setpoint, the fan will turn on for 1 minute. If after 1 minute the relative humidity of the air is still above the RH Setpoint, the unit will start dehumidifying. If the relative humidity of the air at the onboard sensor is below the RH Setpoint after 1 minute, the fan will turn off. The unit will turn the fan on again in 15 minutes and resample the relative humidity.

Controls

Dew Point Cut Out

Dew Point Cut Out is designed to protect the dehumidifier as well as turn the unit off when the total moisture in the air is too low. If the dewpoint is below 40°F, the control will flash the light above the current setpoint. If the dew point is below 40°F at the onboard sensor the unit will stop dehumidifying. If the Fan Mode is set to ON, the fan will continue to run. If the Fan Mode is set to Auto the Fan will turn off.

NOTE: The relative humidity of the air maybe above the RH setpoint of the unit but the dew point is below 40°F. In this case the unit will dehumidify. The unit will turn the fan on every 15 minutes and measure the dew point. Once the dew point rises above 40F the unit will resume normal operation.

Temperature Cut Out

When the temperature of the air after the 1 minute sampling period is above 120F or below 40F the unit will not dehumidify. The unit will turn the fan on for 1 minute, every 15 minutes and measure the temperature. Once the temperature is above 40F or below 120F the unit will resume normal operation.

External Control Mode

Push the RH Setpoint Button until EXT is illuminated. The unit will now operate only based on commands from the terminal block.

This must be activated when an external control is used to control RH. When Terminal Control is active, the internal RH sensor is disabled.

Terminal Block Layout

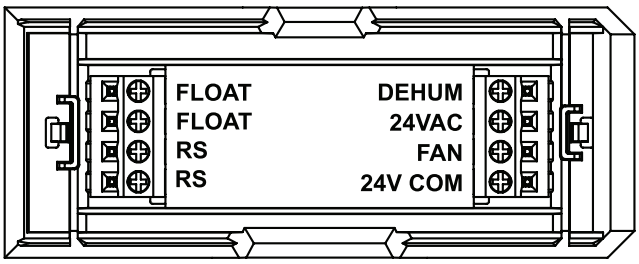

RS is only available on select Santa-Fe models.

24VAC COM	24VAC Power Transformer Neutral Side
FAN	Fan Control
24VAC	Transformer High Side
DEHU	Dehumidification (Fan and Compressor) Control
FLOAT	External Low Voltage Float Switch or Water Sensor (Use Normally Closed Switch)
FLOAT	External Low Voltage Float Switch or Water Sensor (Use Normally Closed Switch)
RS	For Santa-Fe SmartAire™ Remote Sensor
RS	For Santa-Fe SmartAire™ Remote Sensor

Float Switch Cut Out

The terminal block is shipped with a jumper wire between the two FLOAT terminals. This jumper wire must stay in place unless a normally open float switch is installed using these two terminals. If the terminal block is removed E2 will display because the float switch jumper has been removed. Once the terminal block in reinstalled this error will reset. See page 23 for error codes.

Remote Sensor

The optional Santa-Fe SmartAire™ Remote Sensor can be wired from a remote location to the dehumidifier to monitor relative humidity and activate the dehumidifier based on the RH setpoint on the digital control of the dehumidifier.

Fan Control

The fan can be controlled by an external controller for ventilation or air circulating by closing a 24V AC dry contact between FAN and 24V COM.

DEHU Control

The unit can be controlled to dehumidify by closing a 24V AC dry contact between DEHU and 24V COM. The unit will circulate air for 1 minute before starting to dehumidify.

Controls

Error Codes

This unit is capable of detecting critical errors within the system and displaying them on the interface. If the unit has a critical error the FAN ON and FAN AUTO lights will be blinking along with other lights to indicate the error. If only one light is flashing, this is an indication of low Dew Point. See Dew Point Cut Out section of this manual.

The total number of flashing lights indicate the error number in the table below:

Critical Error #	POWER	40	45	50	55	60	EXT	RS	ON	AUTO	Description
3	●	★	O	O	O	O	O	O	★	★	Out of refrigerant
4	●	★	★	O	O	O	O	O	★	★	Float switch tripped
8	●	★	★	★	★	★	★	O	★	★	Comm Error
9	●	★	★	★	★	★	★	★	★	★	High pressure cut-out

● = On, not blinking ★ = Blinking O = Off

Function Check

During routine maintenance it is sometimes necessary to force the unit to operate without dew point or temperature cut offs to ensure the unit is working properly. To activate this mode, press and hold the FAN and POWER button together for 3 seconds. The RH setpoint lights will cycle back and forth when activated.

⚠ IMPORTANT!

THE UNIT MUST BE RETURNED TO NORMAL OPERATION BY QUICKLY PRESSING THE FAN BUTTON.

Air Filtration

The Santa-Fe Advance dehumidifier is equipped with MERV-13 air filter (89-90% ASHRAE dust spot). The filters should be checked and replaced every three to six months. Operating the unit with a dirty filter will reduce dehumidifier capacity and efficiency. A MERV-8 and MERV-11 are filter options.

DO NOT operate the unit without it's filter. Filter non-compliance voids the product warranty.

⚠ CAUTION!

MAKE SURE UNIT IS OFF BEFORE CHANGING THE FILTER. FAILURE TO FOLLOW FILTER HANDLING INSTRUCTIONS MAY RESULT IN IMPROPER FUNCTION OF THE DEHUMIDIFIER AND CAUSE PREMATURE FILTER WEAR OR UNIT DAMAGE.

Changing the Filter

For greatest filtration and efficiency of the Santa-Fe Advance Dry110 dehumidifier, it is recommended the air filters be replaced every three to six months.

Step 1 - Remove the magnetized filter door by pulling it off of the dehumidifier. You can remove it on either side to gain access to the filter.

Step 2 - Remove the filter by pulling it out of the filter compartment.

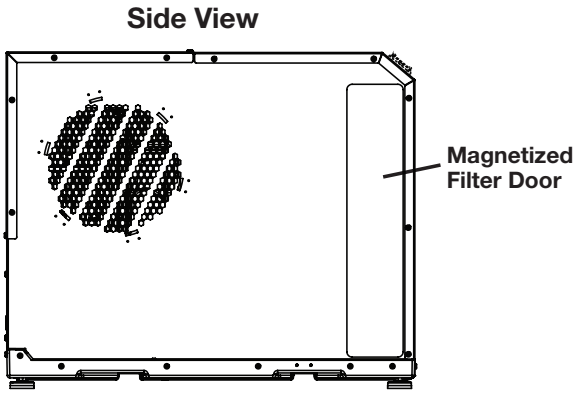

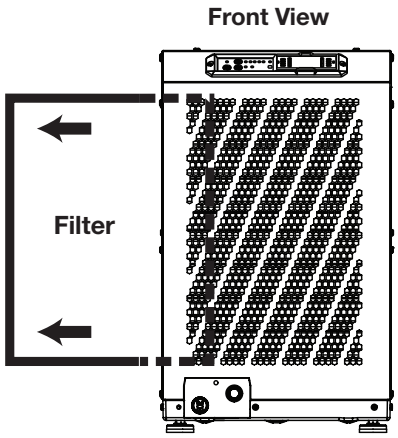

Step 3 - Insert the new filter into the filter compartment and attach the magnetized filter door back into place, ensuring it covers the filter compartment completely. Be sure the arrows on the filter are facing into the dehumidifier.

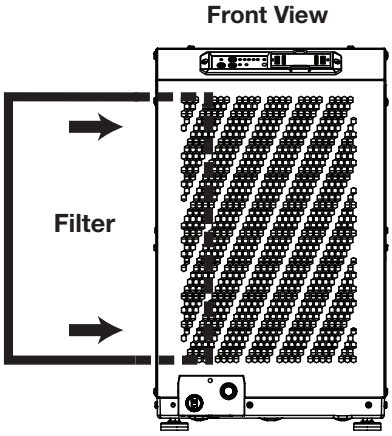

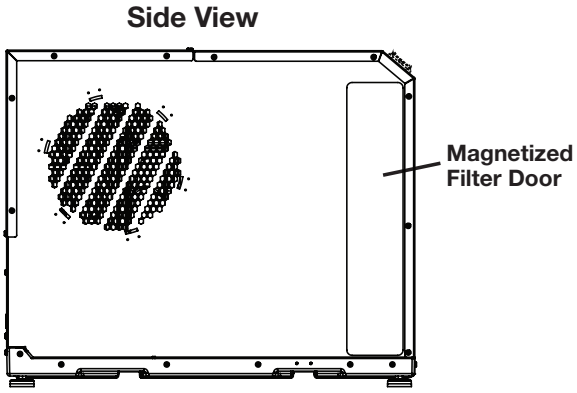

Ducting To Finished Areas (Optional)

Attaching Duct Collars

Supply Air Outlet

Two 10" diameter duct collars attach to the outlets on each side of the unit. They can be attached to one exhaust outlet or both exhaust outlets. Use the included duct plate to block off one of the outlets if needed.

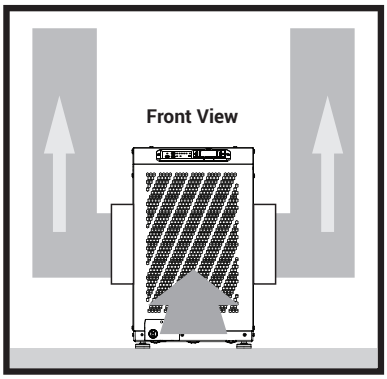

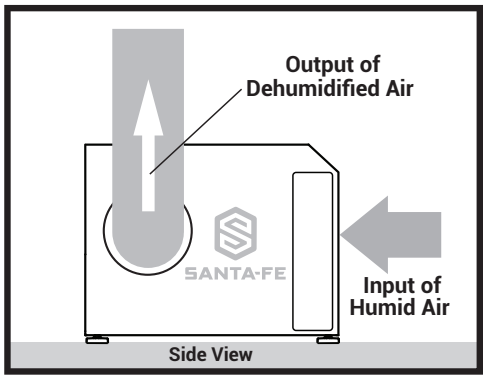

Recommended Installations

- Place the Santa-Fe dehumidifier in the unfinished area of the basement, near a drain access (condensate will drain via gravity or with an optional pump kit).
- Using the supply duct collar, supply the dry air from the dehumidifier into a large, open area in the finished section of the basement.
- Place a return grill / passive vent on the other side of the wall that separates the finished and unfinished areas. This will allow for a circular air flow throughout the basement.
- The passive grill will prevent the unfinished room from being placed under a negative pressure and also allow the dehumidifier to focus on keeping the unfinished area dry as well.
- The onboard digital control can be used to control the unit, or the Santa-Fe SmartAire™ Remote Sensor can be wired to the terminal block and placed in the finished area of the basement.
- Be sure to keep all doors open to any other rooms in the basement to help with proper air circulation (bedrooms, bathrooms, etc.)

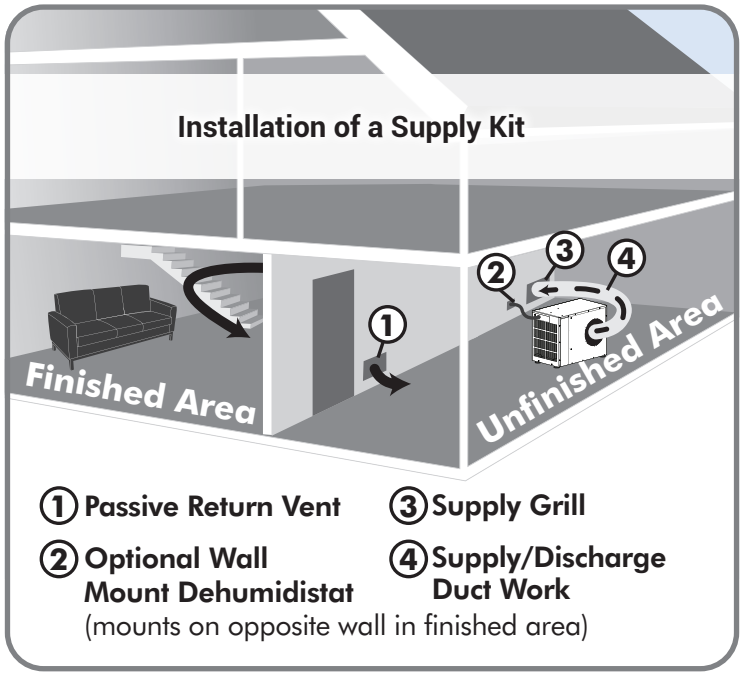

Service

⚠ WARNING!

SERVICING THE DEHUMIDIFIER WITH ITS HIGH PRESSURE REFRIGERANT SYSTEM AND HIGH VOLTAGE CIRCUITRY PRESENTS A HEALTH HAZARD WHICH COULD RESULT IN DEATH, SERIOUS BODILY INJURY, AND/OR PROPERTY DAMAGE. ONLY QUALIFIED SERVICE PEOPLE SHOULD SERVICE THIS UNIT.

Warranty

A warranty certificate has been enclosed in this manual; read it before any repair is initiated. If a warranty repair is required, call the factory first at 1-800-334-6011 for warranty claim authorization and technical assistance.

Technical Description

The dehumidifier uses a refrigeration system similar to an air conditioner's to remove heat and moisture from incoming air, and add heat to the air that is discharged.

Hot, high-pressure refrigerant gas is routed from the compressor to the condenser coil. The refrigerant is cooled and condensed by giving up its heat to the air that is about to be discharged from the unit. The refrigerant liquid then passes through a filter/drier and expanion device which causes the refrigerant pressure and temperature to drop. It next enters the evaporator coil where it absorbs heat from the incoming air and evaporates. The evaporator operates in a flooded condition, which means that all the evaporator tubes contain liquid refrigerant during normal operation. A flooded evaporator should maintain nearly constant pressure and temperature across the entire coil, from inlet to outlet.

The compressor collects the cool refrigerant gas and compresses it to a high pressure and temperature to repeat the process.

Service Personnel

Only qualified HVAC or electrical contractors are allowed to conduct maintenance, service and/or repair operations on the dehumidifier. Examples include but are not limited to breaking into the refrigerating circuit, opening of sealed components, and/or opening of ventilated enclosures.

- Prior to beginning work on the dehumidifier, safety checks are necessary to ensure that the risk of ignition is minimized.
- For repair to the REFRIGERATING SYSTEM, a qualified contractor should first establish a controlled procedure so as to minimize the risk of a flammable gas or vapor being present while the work is being performed
- All maintenance staff and others working in the local area shall be instructed on the nature of work being carried out. Work in confined spaces shall be avoided.
- The area shall be checked with an appropriate refrigerant detector prior to and during work, to ensure the technician is aware of potentially toxic or flammable atmospheres. Ensure that the leak detection equipment being used is suitable for use with all applicable refrigerants, i.e. non-sparking, adequately sealed or intrinsically safe.
- If any hot work is to be conducted on the refrigerating equipment or any associated parts, appropriate fire extinguishing equipment shall be available to hand. Have a dry powder or CO2 fire extinguisher adjacent to the charging area.
- No person carrying out work in relation to a REFRIGERATING SYSTEM which involves exposing any pipe work shall use any sources of ignition in such a manner that it may lead to the risk of fire or explosion. All possible ignition sources, including cigarette smoking, should be kept sufficiently far away from the site of installation, repairing, removing and disposal, during which refrigerant can possibly be released to the surrounding space. Prior to work taking place, the area around the equipment is to be surveyed to make sure that there are no flammable hazards or ignition risks. “No Smoking” signs shall be displayed.
- Ensure that the area is in the open or that it is adequately ventilated before breaking into the system or conducting any hot work. A degree of ventilation shall continue during the period that the work is carried out. The ventilation should safely disperse any released refrigerant and preferably expel it externally into the atmosphere.

Service

The following checks shall be applied to installations using FLAMMABLE REFRIGERANTS:

- Where electrical components are being changed, they shall be fit for the purpose and to the correct specification. At all times Therma-Stor's maintenance and service guidelines shall be followed. If in doubt, consult Therma-Stor's technical department for assistance.
- The actual REFRIGERANT CHARGE is in accordance with the room size within which the refrigerant containing parts are installed;
- The ventilation machinery and outlets are operating adequately and are not obstructed;
- Marking to the equipment continues to be visible and legible. Markings and signs that are illegible shall be corrected;
- Dehumidifiers are installed in a position where they are unlikely to be exposed to any substance which may corrode refrigerant containing components, unless the components are constructed of materials which are inherently resistant to being corroded or are suitably protected against being so corroded.

Checks to Electrical Devices

Repair and maintenance to electrical components shall include initial safety checks and component inspection procedures. If a fault exists that could compromise safety, then no electrical supply shall be connected to the circuit until it is satisfactorily dealt with. If the fault cannot be corrected immediately but it is necessary to continue operation, an adequate temporary solution shall be used. This shall be reported to the owner of the equipment so all parties are advised.

Initial safety checks shall include:

- that capacitors are discharged: this shall be done in a safe manner to avoid possibility of sparking;
- that no live electrical components and wiring are exposed while charging, recovering or purging the system;
- that there is continuity of earth bonding;

Sealed Electrical Components Shall Be Replaced

- During repairs to sealed components, all electrical supplies shall be disconnected from the equipment being worked upon prior to any removal of sealed covers, etc. If it is absolutely necessary to have an electrical supply to equipment during servicing, then a permanently operating form of leak detection shall be located at the most critical point to warn of a potentially hazardous situation.
- Particular attention shall be paid to the following to ensure that by working on electrical components, the casing is not altered in such a way that the level of protection is affected. This shall include damage to cables, excessive number of connections, terminals not made to original specification, damage to seals, incorrect fitting of glands, etc.
- Ensure that the equipment is mounted securely.
- Ensure that seals or sealing materials have not degraded to the point that they no longer serve the purpose of preventing the ingress of flammable atmospheres.
- Replacement parts shall be in accordance with Therma-Stor specifications.

Intrinsically Safe Components Must Be Replaced

- Do not apply any permanent inductive or capacitance loads to the circuit without ensuring that this will not exceed the permissible voltage and current permitted for the equipment in use.
- Intrinsically safe components are the only types that can be worked on while live in the presence of a flammable atmosphere. The test apparatus shall be at the correct rating.
- Replace components only with parts specified by Therma-Stor. Other parts may result in the ignition of refrigerant in the atmosphere from a leak.

NOTE: The use of silicon sealant can inhibit the effectiveness of some types of leak detection equipment. Intrinsically safe components do not have to be isolated prior to working on them.

Check that cabling will not be subject to wear, corrosion, excessive pressure, vibration, sharp edges or any other adverse environmental effects. The check shall also take into account the effects of aging or continual vibration from sources such as compressors or fans.

Service

Detection of Flammable Refrigerants

Under no circumstances shall potential sources of ignition be used in the searching for or detection of refrigerant leaks. A halide torch (or any other detector using a naked flame) shall not be used.

The following leak detection methods are deemed acceptable for all refrigerant systems:

- Electronic leak detectors may be used to detect refrigerant leaks but, in the case of FLAMMABLE REFRIGERANTS, the sensitivity may not be adequate, or may need re-calibration. (Detection equipment shall be calibrated in a refrigerant-free area.) Ensure that the detector is not a potential source of ignition and is suitable for the refrigerant used. Leak detection equipment shall be set at 25% LFL of the refrigerant and shall be calibrated to 454B.
- Leak detection fluids are also suitable for use with most refrigerants but the use of detergents containing chlorine shall be avoided as the chlorine may react with the refrigerant and corrode the copper pipe.

NOTE: Examples of leak detection fluids are:

- bubble method
- fluorescent method agents.
- If a leak is suspected, all open flames shall be removed/extinguished.

If a leakage of refrigerant is found which requires brazing, all of the refrigerant shall be recovered from the system, or isolated (by means of shut off valves) in a part of the system remote from the leak. Removal of refrigerant shall be according to Clause DD.9 of 60335-2-40.

Refrigerant Removal and Evacuation

When breaking into the refrigerant circuit to make repairs – or for any other purpose – conventional procedures shall be used. However, for FLAMMABLE REFRIGERANTS it is important that best practice is followed since flammability is a consideration. The following procedure shall be adhered to:

- Safely remove refrigerant following local and national regulations.
- The REFRIGERANT CHARGE shall be recovered into the correct recovery cylinders if venting is not allowed by local and national codes.
- For appliances containing flammable refrigerants, the system shall be purged with oxygen-free nitrogen to render the appliance safe for flammable refrigerants.
- This process might need to be repeated several times. Compressed air or oxygen shall not be used for purging refrigerant systems.
- When the final oxygen-free nitrogen charge is used, the system shall be vented down to atmospheric pressure to enable work to take place.
- Open the circuit by cutting or brazing.
- Ensure that the outlet for the vacuum pump is not close to any POTENTIAL IGNITION SOURCES and that ventilation is available.

Charging Procedures

In addition to conventional charging procedures, the following requirements shall be followed:

- Ensure that contamination of different refrigerants does not occur when using charging equipment. Hoses or lines shall be as short as possible to minimize the amount of refrigerant contained in them.
- Cylinders shall be kept in an appropriate position according to the instructions.
- Ensure that the REFRIGERATING SYSTEM is grounded prior to charging the system with refrigerant.
- Label the system when charging is complete (if not already).
- Extreme care shall be taken not to overfill the REFRIGERATING SYSTEM.
- Prior to recharging the system, it shall be pressure-tested with the appropriate purging gas. The system shall be leak-tested on completion of charging but prior to commissioning. A follow up leak test shall be carried out prior to leaving the site.

Service

Decommissioning

Before carrying out this procedure, it is essential that the technician is completely familiar with the equipment and all its details. It is recommended good practice that all refrigerants are recovered safely. Prior to the task being carried out, an oil and refrigerant sample shall be taken in case analysis is required prior to re-use of recovered refrigerant. It is essential that electrical power is available before the task commences.

- Become familiar with the equipment and its operation.
- Isolate system electrically.

Before attempting the procedure, ensure that:

  - mechanical handling equipment is available, if required, for handling refrigerant cylinders;
  - all personal protective equipment is available and being used correctly;
  - the recovery process is supervised at all times by a competent person;
  - recovery equipment and cylinders conform to the appropriate standards.

- Pump down refrigerant system, if possible.
- If a vacuum is not possible, make a manifold so that refrigerant can be removed from various parts of the system.
- Make sure that cylinder is situated on the scales before recovery takes place.
- Start the recovery machine and operate in accordance with instructions.
- Do not overfill cylinders (no more than 80 % volume liquid charge).
- Do not exceed the maximum working pressure of the cylinder, even temporarily.
- When the cylinders have been filled correctly and the process completed, make sure that the cylinders and the equipment are removed from site promptly and all isolation valves on the equipment are closed off.
- Recovered refrigerant shall not be charged into another REFRIGERATING SYSTEM unless it has been cleaned and checked.

Labelling Decommission Machines

Equipment shall be labelled stating that it has been de-commissioned and emptied of refrigerant. The label shall be dated and signed. For appliances containing FLAMMABLE REFRIGERANTS, ensure that there are labels on the equipment stating the equipment contains FLAMMABLE REFRIGERANT.

Refrigerant Recovery

- When removing refrigerant from a system, either for servicing or decommissioning, it is recommended good practice that all refrigerants are removed safely.
- When transferring refrigerant into cylinders, ensure that only appropriate refrigerant recovery cylinders are employed. Ensure that the correct number of cylinders for holding the total system charge is available. All cylinders to be used are designated for the recovered refrigerant and labelled for that refrigerant (i.e. special cylinders for the recovery of refrigerant). Cylinders shall be complete with pressure-relief valve and associated shut-off valves in good working order. Empty recovery cylinders are evacuated and, if possible, cooled before recovery occurs.
- The recovery equipment shall be in good working order with a set of instructions concerning the equipment that is at hand and shall be suitable for the recovery of all appropriate refrigerants including, when applicable, FLAMMABLE REFRIGERANTS. In addition, a set of calibrated weighing scales shall be available and in good working order. Hoses shall be complete with leak-free disconnect couplings and in good condition. Before using the recovery machine, check that it is in satisfactory working order, has been properly maintained and that any associated electrical components are sealed to prevent ignition in the event of a refrigerant release. Consult manufacturer if in doubt.
- The recovered refrigerant shall be returned to the refrigerant supplier in the correct recovery cylinder, and the relevant waste transfer note arranged. Do not mix refrigerants in recovery units and especially not in cylinders.
- If compressors or compressor oils are to be removed, ensure that they have been evacuated to an acceptable level to make certain that FLAMMABLE REFRIGERANT does not remain within the lubricant. The evacuation process shall be carried out prior to returning the compressor to the suppliers. Only electric heating to the compressor body shall be employed to accelerate this process. When oil is drained from a system, it shall be carried out safely.

Service - Troubleshooting

⚠ CAUTION!

TROUBLESHOOTING SHOULD BE PERFORMED BY A QUALIFIED HVAC TECHNICIAN.

Symptom	Possible Reason	Troubleshooting Procedure
Neither fan nor compressor running. Dehumidification is being called for.	1. Dehumidifier unplugged or no power to outlet. 2. Humidity control set too high. 3. Loose connection in internal or control wiring. 4. Defective compressor relay. 5. Defective control transformer.	**⚠ WARNING!** **ELECTRICAL SHOCK HAZARD. ELECTRICAL POWER MUST BE PRESENT TO PERFORM SOME TESTS. THESE TESTS SHOULD BE PERFORMED BY A QUALIFIED SERVICE PERSON.** **Troubleshooting Procedure for Control Related Issues** This method of diagnosis will test the 3 main components of the control circuit individually to indicate any potential problems. This is to be used when the control will not activate the main unit. 1. Detach field control wiring connections from the terminals on the main unit. 2. Connect the 24V and FAN terminals together; only the fan should run. Disconnect the terminals. 3. Connect the 24V and DEHU terminals together; fan and compressor should run. Disconnect the terminals. 4. If this test works, the main unit is working correctly from a control standpoint. 5. Reconnect field control wiring to the terminals on the main unit. 6. Remove the control panel cover and detach the field wiring from the control connections. 7. Connect the 24V and FAN terminals together; only the fan should run. Disconnect the terminals. 8. Connect the 24V and DEHU terminals together; fan and compressor should run. Disconnect the terminals. 9. If this test works, then the field control wiring is ok. 10. If the problem persists, then the control is most likely faulty.
Compressor is not running. Dehumidification is being called for. Fan is running.	1. Defective compressor run capacitor. 2. Loose connection in compressor circuit. 3. Defective compressor overload. 4. Defective compressor.	
Compressor cycles on and off. Dehumidification is being called for.	1. Low ambient temperature and/or humidity causing unit to cycle through defrost mode. 2. Defective compressor overload. 3. Defective compressor. 4. Defrost thermostat defective. 5. Dirty air filter(s) or air flow restricted. 6. Defective fan or relay.	
Fan is not running. Dehumidification or fan is being called for.	1. Loose connection in fan circuit. 2. Obstruction prevents fan impeller rotation. 3. Defective fan. 4. Defective fan relay.	

Service - Troubleshooting

Symptom	Possible Reason	Troubleshooting Procedure
Low dehumidification capacity (evaporator is frosted continuously). Dehumidification is being called for.	1. Defrost thermostat loose or defective. 2. Low refrigerant charge. 3. Dirty air filter(s) or air flow restricted. 4. Excessively restrictive ducting connected to unit.	⚠ **WARNING!** **ELECTRICAL SHOCK HAZARD. ELECTRICAL POWER MUST BE PRESENT TO PERFORM SOME TESTS. THESE TESTS SHOULD BE PERFORMED BY A QUALIFIED SERVICE PERSON.** **Troubleshooting Procedure for Control Related Issues** This method of diagnosis is used to function check the internal components in the dehumidifier. This is to be used when a performance issue is suspected. 1. Set the humidity controller all the way to the most humid setting or off position – Did the unit shut off? 2. If yes, turn the fan setting to the ON position – does the fan start? 3. If fan starts, leave in the fan ON position and set the humidity all the way to driest setting. May have to wait 5 minutes for the compressor to start. 4. Listen for a distinct buzzing/humming sound of a compressor starting up – do you hear this noise? 5. If compressor is running and continues to run, after about 15 minutes you should feel a slight increase in air temperature being discharged out of the discharge air side of the unit. 6. If so, depending on your environmental conditions (temp/Rh%), you should see some water production out of the hose within 30 minutes or so. (Note: If the room temperature is 55 degrees or below and/or in area of low relative humidity, the dehumidifier will produce little to no water.) 7. Collecting the water removed in a 24 hour period will give a measurement of performance.
Dehumidifier removes some water, but not as much as expected.	1. Air temperature and/or humidity have dropped. 2. Humidity meter and or thermometer used are out of calibration. 3. Unit has entered defrost cycle. 4. Dirty air filter(s) or air flow is restricted. 5. Defective defrost thermostat. 6. Low refrigerant charge. 7. Air leak such as loose cover or ducting leaks. 8. Defective compressor. 9. Restrictive ducting.	

Refrigerant Charging

⚠ **WARNING!**

SERVICING THE SANTA-FE ULTRA V155 WITH ITS HIGH PRESSURE REFRIGERANT SYSTEM AND HIGH VOLTAGE CIRCUITRY PRESENTS A HEALTH HAZARD WHICH COULD RESULT IN DEATH, SERIOUS BODILY INJURY, AND/OR PROPERTY DAMAGE. SERVICE MUST BE PERFORMED BY A QUALIFIED SERVICE TECHNICIAN.

If the refrigerant charge is lost due to service or a leak, the leak should be repaired and a new charge must be accurately weighed in. If any of the old charge is left in the system, it must be recovered before weighing in the new charge. Refer to the unit nameplate for the correct charge weight and refrigerant type.

Limited Warranty

Terms of Coverage

Your Santa-Fe™ Dehumidifier is expressly warranted to be free from defects in materials or workmanship for five (5) years from date of purchase and the product's components will be free of defects in workmanship or materials for a period of six (6) years following the date of purchase.

What Is Covered

The exclusive obligation of Santa-Fe under this Limited Warranty shall be, at the sole discretion of Santa-Fe, to supply, without charge, a replacement for any component or product which is found to be defective. A defective part will be replaced pursuant to this Limited Warranty with a genuine Santa-Fe part. A defective product will be replaced pursuant to this Limited Warranty with a new Santa-Fe product of equal or similar features and functionality if the original product has been discontinued or is no longer available.

Not Covered by the Limited Warranty

- Consumable or maintenance products, such as, but not limited to Air Filters.
- Products purchased from third parties that were previously used, such as previously used products purchased from eBay, similar third party/auction sites, or individuals selling used products.
- Labor charges, shipping costs, removal fees, service fees, or reinstallation costs.
- Materials furnished by the installer.
- Damage caused by misuse, abuse, improper installation, or failing to install, use, or maintain the product in accordance with the instructions provided.
- Damage to HVAC equipment caused by improper installation(s) or misapplication installation(s).
- Modifications, changes, repurposing, or alterations to the Santa-Fe product.
- Extended warranties or satisfaction guarantees offered by third parties.
- Cosmetic damage or normal wear and tear, including, but not limited to: scratches, peeling finish, or dents that do not impede the mechanical functionality of the product.
- Damage caused by acts of nature, including but not limited to: fire, collision, flood, wind, power surge, lighting strike, or mold.
- Damage caused during transit.
- Damage caused during installation due to failure to follow local, state, or federal laws, statutes, codes, or ordinances.
- Damage caused by defects in materials furnished by the installer.

Limit of Liability

IMPLIED WARRANTIES OF MERCHANTABILITY OR FITNESS FOR A PARTICULAR PURPOSE SHALL BE LIMITED IN DURATION TO THE AFOREMENTIONED EXPRESS WARRANTY PERIOD. SANTA-FE LIABILITY FOR INCIDENTAL OR CONSEQUENTIAL DAMAGES, OTHER THAN DAMAGES FOR PERSONAL INJURIES, RESULTING FROM ANY BREACH OF THE AFOREMENTIONED IMPLIED WARRANTIES OR THE ABOVE LIMITED WARRANTY IS EXPRESSLY EXCLUDED. THIS LIMITED WARRANTY IS VOID IF DEFECT(S) RESULT(S) FROM FAILURE TO INSTALL THE PRODUCT ACCORDING TO THE SANTA-FEAPRILAIRE INSTALLATION INSTRUCTIONS. IF THE LIMITED WARRANTY IS VOID DUE TO MISAPPLICATION OR IMPROPER INSTALLATION, ALL DISCLAIMERS OF IMPLIED WARRANTIES SHALL BE EFFECTIVE UPON INSTALLATION.

If a Product or component is replaced while under warranty, the applicable limited warranty period shall not be extended beyond the original warranty time period.

Some states do not allow limitations on how long an implied warranty lasts or the exclusion or limitation of incidental or consequential damages, so the above limitation(s) may not apply to your situation. This Limited Warranty gives you specific legal rights, and you may also have other rights which vary from state to state.

WARRANTY REGISTRATION CARD / TARJETA DE REGISTRO DE GARANTIA

IMPORTANT WARRANTY INFORMATION - DO NOT DISCARD

REGISTER YOUR PRODUCT.

WARRANTY

SERIAL NUMBER ▶

PART NUMBER ▶

WARRANTY

www.santa-fe-products.com/product-registration

Register your product using the serial number and part number above at www.santa-fe-products.com/product-registration

This is important Warranty Information. Please DO NOT DISCARD!

Santa-Fe-Products.com
(888) 277-4524